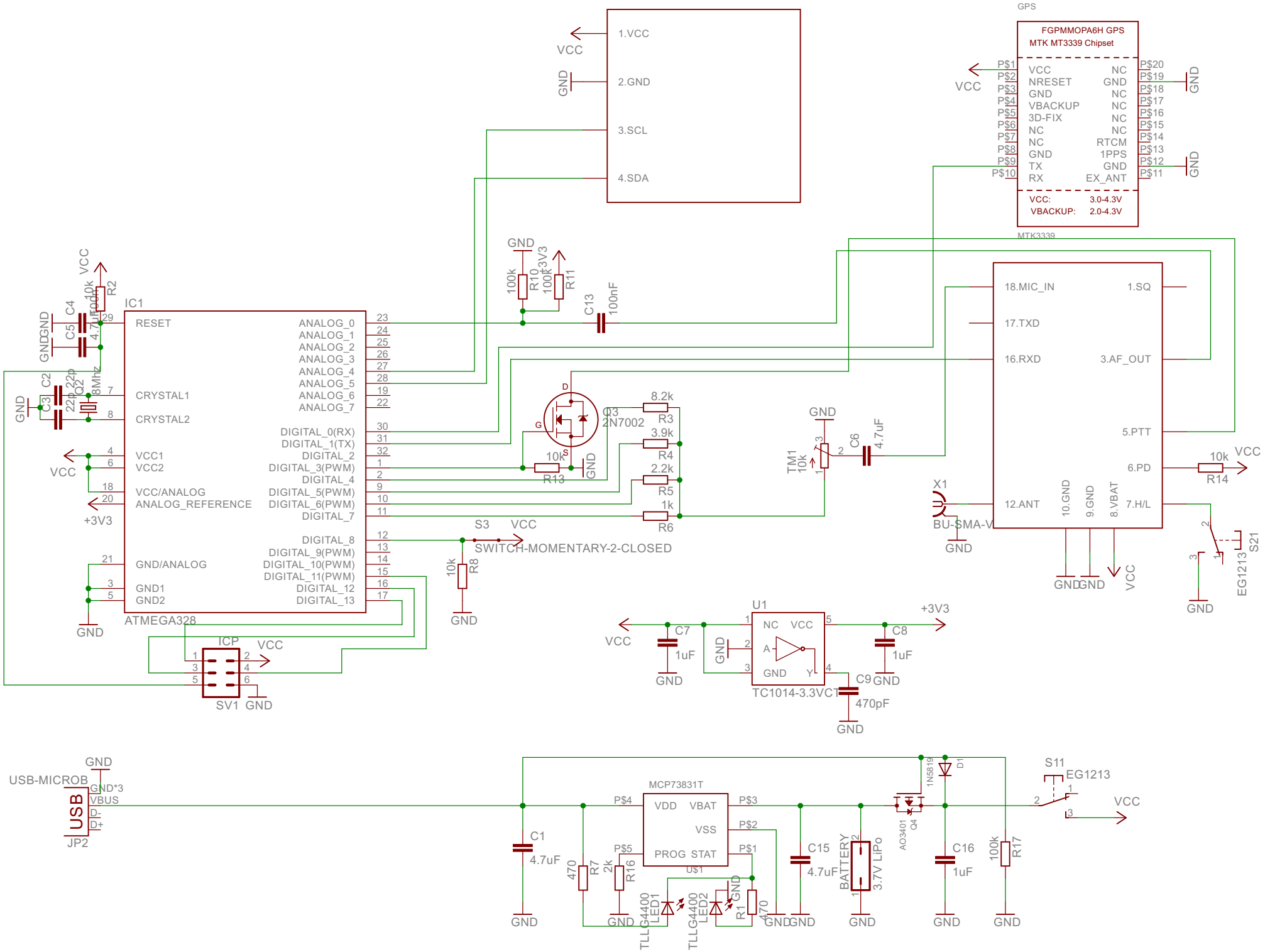
GPS
FGPMMOPA6H GPS
MTK MT3339 Chipset
VCC
NRESET
GND
VBACKUP
3D-FIX
NC
NC
TX
RX
NC
GND
NC
NC
NC
NC
RTCM
1PPS
GND
EX_ANT
VCC: 3.0-4.3V
VBACKUP: 2.0-4.3V
MTK3339
1.VCC
2.GND
3.SCL
4.SDA
IC1
RESET
CRYSTAL1
CRYSTAL2
VCC1
VCC2
VCC/ANALOG
ANALOG_REFERENCE
GND/ANALOG
GND1
GND2
ANALOG_0
ANALOG_1
ANALOG_2
ANALOG_3
ANALOG_4
ANALOG_5
ANALOG_6
ANALOG_7
DIGITAL_0(RX)
DIGITAL_1(TX)
DIGITAL_2
DIGITAL_3(PWM)
DIGITAL_4
DIGITAL_5(PWM)
DIGITAL_6(PWM)
DIGITAL_7
DIGITAL_8
DIGITAL_9(PWM)
DIGITAL_10(PWM)
DIGITAL_11(PWM)
DIGITAL_12
DIGITAL_13
ATMEGA328
8MHz
Q2
C2 22p
C3 22p
C4 4.7uF
C5 4.7uF
R2 10k
R10 100k
R11 100k
C13 100nF
Q3 2N7002
R13 10k
R3 8.2k
R4 3.9k
R5 2.2k
R6 1k
TM1 10k
C6 4.7uF
S3
SWITCH-MOMENTARY-2-CLOSED
R8 10k
ICP
SV1
18.MIC_IN
17.TXD
16.RXD
12.ANT
1.SQ
3.AF_OUT
5.PTT
6.PD
7.H/L
10.GND
9.GND
8.VBAT
R14 10k
X1
BU-SMA-V
S21
EG1213
U1
NC
VCC
A
GND
Y
TC1014-3.3VCT
C7 1uF
C8 1uF
C9 470pF
+3V3
USB-MICROB
GND*3
VBUS
D-
D+
USB
JP2
MCP73831T
VDD
VBAT
VSS
PROG
STAT
U$1
C1 4.7uF
R7 470
R16 2k
LED1 TLLG4400
LED2 TLLG4400
R1 470
C15 4.7uF
BATTERY
3.7V LiPo
Q4 AO3401
D1 1N5819
C16 1uF
R17 100k
S11
EG1213